TAIWAN EXCELLENCE 2015

IP65 IP68 (optional)

UL62368-1 TPTC004 IEC62368-1

Household Automate Industrial Security Network Telecom

Features

- Universal AC input / Full range(up to 305VAC)
- Built-in active PFC function
- High efficiency up to 95%
- Fanless design, cooling by free air convection
- -55~+70℃ wide operating range
- Aluminum case and filling with heat-conducted silicone
- IP65 design, optional IP68 rated model available
- Meet 6KV surge immunity level
- Withstand 10G vibration test
- Operating altitude up to 5000 meters (Note.8)
- Protections: Short circuit / Overload / Over voltage / Over temperature
- 6 years warranty

Applications

- Outdoor telecommunication equipment
- Outdoor electronic signage and billboard
- Petroleum plant or mine shaft facility

Description

HEP-320 is a 320W industrial AC/DC power supply featuring the outstanding capability to operate under a harsh environment with high dust density, humidity, vibration and altitude. The entire series is housed with a robust aluminum case and fully potted with heat-conducted silicone. Thanks to state-of-the-art design, the working efficiency is up to 95%, enabling HEP-320, with a fanless design, perfectly work between -55℃ and +70℃ under free air convection.

Model Encoding

HEP - 320 - 12 A

- Function mode option
  - A : Standard model, IP65, Vo and Io level can be adjusted through internal potentiometer.
  - Blank : Optional model, IP68, with fixed Vo and Io level.
- Output voltage
- Output wattage
- Series name

File Name:HEP-320-SPEC 2022-08-05

SPECIFICATION

MODEL		HEP-320-12□	HEP-320-15□	HEP-320-24□	HEP-320-36□	HEP-320-48□	HEP-320-54□
OUTPUT	DC VOLTAGE	12V	15V	24V	36V	48V	54V
	RATED CURRENT	22A	19A	13.34A	8.9A	6.7A	5.95A
	RATED POWER	264W	285W	320.16W	320.4W	321.6W	321.3W
	RIPPLE & NOISE (max.) Note.2	150mVp-p	150mVp-p	150mVp-p	250mVp-p	250mVp-p	350mVp-p
	VOLTAGE ADJ. RANGE Note.5	10.8 ~ 13.5V	13.5 ~ 17V	21 ~ 26V	32 ~ 39V	43 ~ 52V	49 ~ 58V
	CURRENT ADJ. RANGE Note.5	11 ~ 22A	9.5 ~ 19A	6.67 ~ 13.34A	4.45 ~ 8.9A	3.35 ~ 6.7A	2.97 ~ 5.95A
	VOLTAGE TOLERANCE Note.3	±3.0%	±2.0%	±1.0%	±1.0%	±1.0%	±1.0%
	LINE REGULATION	±0.5%	±0.5%	±0.5%	±0.5%	±0.5%	±0.5%
	LOAD REGULATION	±2.0%	±1.5%	±0.5%	±0.5%	±0.5%	±0.5%
	SETUP, RISE TIME Note.6	2500ms,80ms/115VAC 500ms,80ms/230VAC at full load					
	HOLD UP TIME (Typ.)	15ms at full load 230VAC /115VAC					
INPUT	VOLTAGE RANGE Note.4	85~264VAC (277VAC operational) 120~370VDC(390VDC operational)					
	FREQUENCY RANGE	47 ~ 63Hz					
	POWER FACTOR (Typ.)	PF>0.98/115VAC, PF>0.95/230VAC, PF>0.94/277VAC at full load					
	EFFICIENCY (Typ.)	91%	92.5%	94%	94%	94.5%	95%
	AC CURRENT (Typ.)	3.5A / 115VAC 1.65A / 230VAC 1.45A / 277VAC					
	INRUSH CURRENT(Typ.)	COLD START 70A at 230VAC					
	LEAKAGE CURRENT	<0.75mA / 277VAC					
PROTECTION	OVER CURRENT	105 ~ 125%					
		Protection type : Hiccup mode, recovers automatically after fault condition is removed					
	SHORT CIRCUIT	Hiccup mode, recovers automatically after fault condition is removed					
	OVER VOLTAGE	14 ~ 17V	17.5 ~ 21V	27 ~ 33V	40 ~ 46V	53.5 ~ 60V	59 ~ 65V
		Protection type : Shut down and latch off o/p voltage, re-power on to recover					
	OVER TEMPERATURE	Shut down and latch off o/p voltage, re-power on to recover					
ENVIRONMENT	WORKING TEMP.	-55 ~ +70℃ (Refer to "Derating Curve")					
	WORKING HUMIDITY	20 ~ 95% RH non-condensing					
	STORAGE TEMP., HUMIDITY	-60 ~ +80℃, 10 ~ 95% RH non-condensing					
	TEMP. COEFFICIENT	±0.03%/℃ (0 ~ 60℃)					
	VIBRATION	20 ~ 500Hz, 10G 12min./1cycle, period for 72min. each along X, Y, Z axes					
SAFETY & EMC	SAFETY STANDARDS Note.8	UL62368-1,IEC62368-1, IP65 (or IP68 for HEP-320 Blank-Type), EAC TP TC 004 approved ; Design refer to BS EN/EN62368-1					
	WITHSTAND VOLTAGE	I/P-O/P:3.75KVAC I/P-FG:2KVAC O/P-FG:1.5KVAC					
	ISOLATION RESISTANCE	I/P-O/P, I/P-FG, O/P-FG:100M Ohms / 500VDC / 25℃/ 70% RH					
	EMC EMISSION	Compliance to BS EN/EN55032 (CISPR32) Class B, BS EN/EN61000-3-2,-3, EAC TP TC 020					
	EMC IMMUNITY	Compliance to BS EN/EN61000-4-2,3,4,5,6,8,11, BS EN/EN55035, light industry level (surge 6KV), EAC TP TC 020					
OTHERS	MTBF	1565.6K hrs min. Telcordia SR-332 (Bellcore) ; 154.2Khrs min. MIL-HDBK-217F (25℃)					
	DIMENSION	252*90*43.8mm (L*W*H)					
	PACKING	1.88Kg; 8pcs/16Kg/0.92CUFT					

NOTE

1. All parameters NOT specially mentioned are measured at 230VAC input, rated load and 25℃ of ambient temperature.
2. Ripple & noise are measured at 20MHz of bandwidth by using a 12" twisted pair-wire terminated with a 0.1uf & 47uf parallel capacitor.
3. Tolerance : includes set up tolerance, line regulation and load regulation.
4. Derating may be needed under low input voltages. Please check the static characteristics for more details.
5. A-type only.
6. Length of set up time is measured at cold first start. Turning ON/OFF the power supply may lead to increase of the set up time.
7. The power supply is considered as a component that will be operated in combination with final equipment. Since EMC performance will be affected by the complete installation, the final equipment manufacturers must re-qualify EMC Directive on the complete installation again.
8. The ambient temperature derating of 3.5℃/1000m with fanless models and of 5℃/1000m with fan models for operating altitude higher than 2000m(6500ft).
9. The water protection level test for the IP68 rating is performed 1000mm below the surface of the water for 1 month.

※ Product Liability Disclaimer : For detailed information, please refer to https://www.meanwell.com/serviceDisclaimer.aspx

TRC ELECTRONICS, INC. 1.888.612.9514 www.trcelectronics.com

Block Diagram

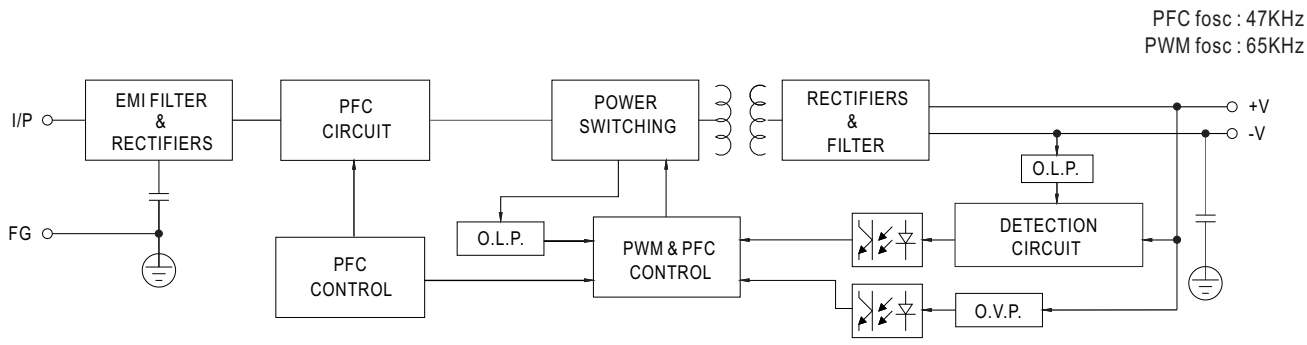

Derating Curve

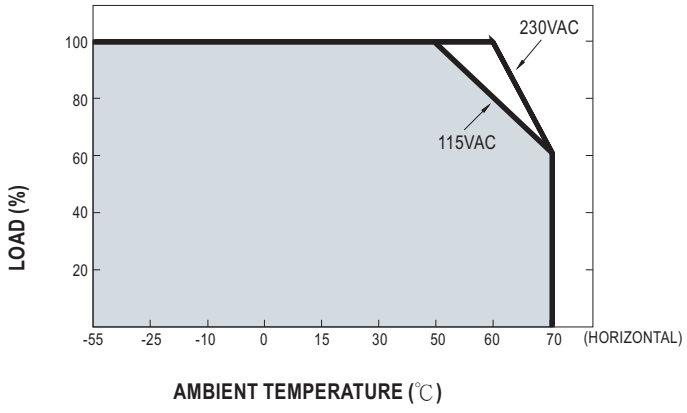

Static Characteristics

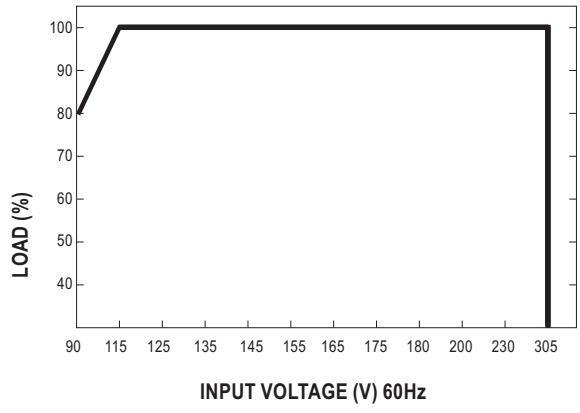

TRC ELECTRONICS, INC. 1.888.612.9514 www.trcelectronics.com

■ Mechanical Specification

Case No.202A Unit:mm

A-Type: HEP-320-_A(standard model)

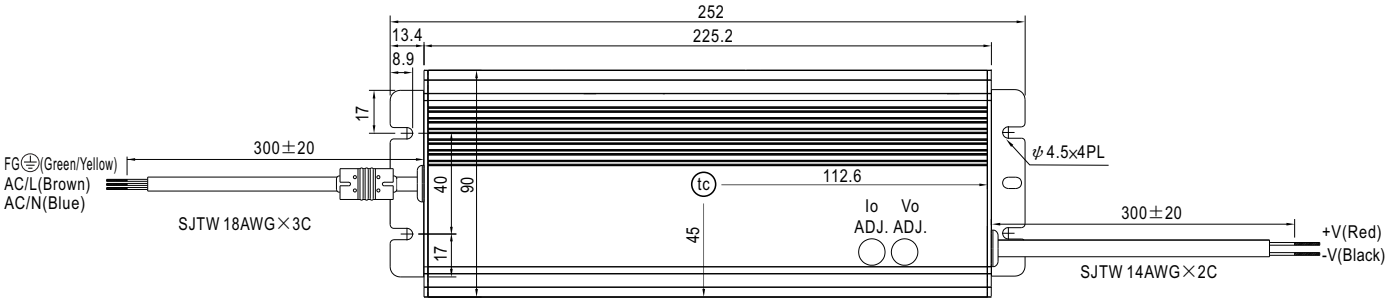

• tc : Max. Case Temperature

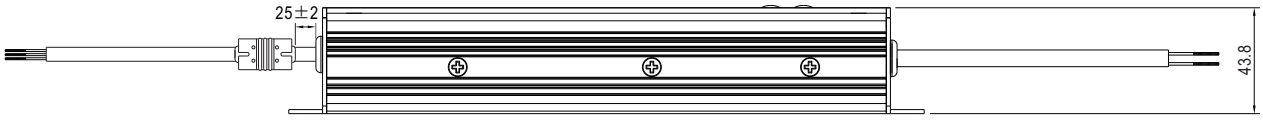

※ IP65 rated. Output voltage and constant current level can be adjusted through internal potentiometer.
(Can access by removing the rubber stopper on the case.)

Blank-Type: HEP-320(optional model)

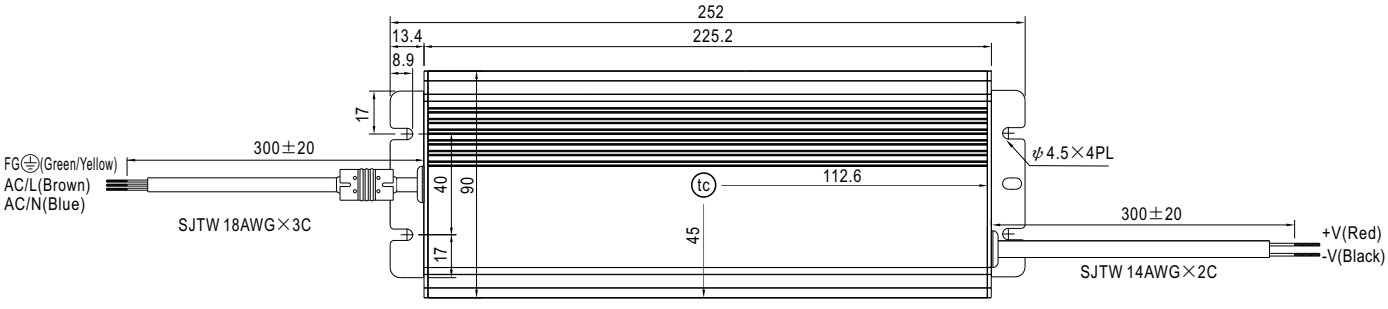

• tc : Max. Case Temperature

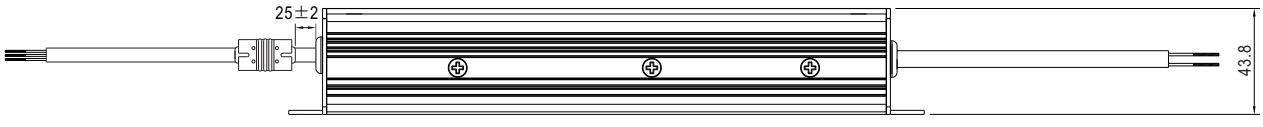

※IP68 rated. Cable for I/O connection.

TRC ELECTRONICS, INC. 1.888.612.9514 www.trcelectronics.com