IEC Power Entry Inlet with Line Filter

- IEC320-C14 Filtered Inlet
- Single Fuse
- Input Switch
- Screw Mount
- Compact Design
- ITE Applications
- 1, 2, 4, 6 & 10A Rating
- 6.3 x 0.8mm Faston Terminals
- Bleed Resistor
- Shielded Metal Body
- Wide Operating Temperature Range
- 3 Year Warranty

Combining a double pole switch, front accessible (when the mains connector is disconnected) single fuse and a filtered IEC320-C14 inlet in a compact single housing, the FFSA is designed for ITE applications. When fitted to mains powered equipment, they provide excellent attenuation to conducted electro-magnetic interference from the mains supply, whilst reducing any conducted emissions from within the equipment onto the mains supply. Suitable for class I appliances, all models feature a shielded metal body, and are fitted with a bleed resistor to safely discharge the filter capacitors when power is disconnected. Safety approvals are EN60939-2 for passive filters & ANSI/UL1283 for EMI filters. They feature a wide operating temperature range of -40°C to +110°C with full power operation up to +50°C.

Specifications

Characteristics	Minimum	Typical	Maximum	Units	Notes and Conditions
Rated Voltage			250	VAC	
Input Frequency	DC		400	Hz	
Rated Current	1		10	A	See models and ratings table
Earth Leakage Current	0.25		0.48	mA	See models and ratings table
MTBF	1.35			MHrs	MIL-HDBK 217F, 250VAC at 40°C
Flammability Rating	UL94V-2				
Temperature Operating	-40		110	°C	See derating curve
Safety Approvals	EN60939-2				Passive filter units for EMI suppression
	ANSI/UL1283				Electromagnetic Interference Filters
Terminals	Faston 6.3 x 0.8mm straight				
Protection Class	Suitable for appliances with protection Class I				
Dielectric Strength		1500		VAC	

Electrical Schematic

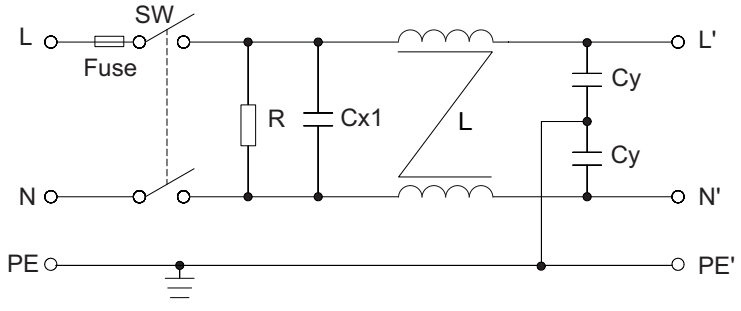

Note: Fuse not supplied

Models & Ratings

Rated current	Leakage current		Inductance	Capacitance		Resistance	Weight	Application	Mounting	Filter
	115VAC/60Hz	250VAC/50Hz	@10kHz, 0.25V	Cx	Cy					
1A	0.25mA	0.45mA	2 x 6.5mH	0.1 µF	2 x 2.2 nF	1MΩ	96g	ITE	Screw	FFSAS01BFR
2A	0.25mA	0.45mA	2 x 3.8mH	0.1 µF	2 x 2.2 nF	1MΩ	96g	ITE	Screw	FFSAS02BFR
4A	0.25mA	0.45mA	2 x 1.6mH	0.1 µF	2 x 2.2 nF	1MΩ	96g	ITE	Screw	FFSAS04BFR
6A	0.25mA	0.45mA	2 x 0.8mH	0.1 µF	2 x 2.2 nF	1MΩ	98g	ITE	Screw	FFSAS06BFR
10A	0.25mA	0.45mA	2 x 0.2mH	0.1 µF	2 x 2.2 nF	1MΩ	104g	ITE	Screw	FFSAS10BFR

Thermal Derating

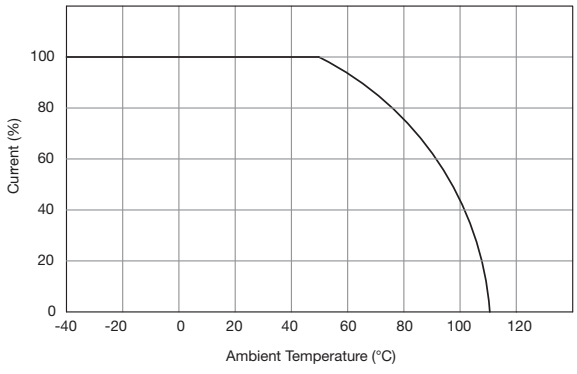

Mechanical Details

All dimensions in inches (mm)

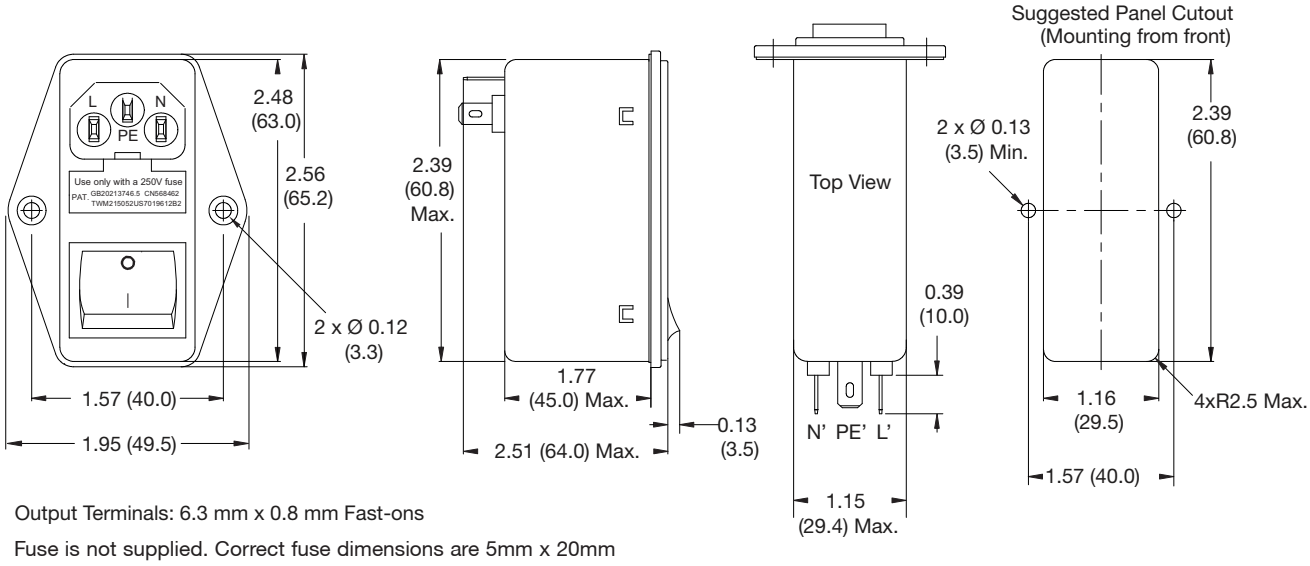

Output Terminals: 6.3 mm x 0.8 mm Fast-ons

Fuse is not supplied. Correct fuse dimensions are 5mm x 20mm

Typical Attenuation Curves

———— Common Mode/Asymmetrical(L-G)

---------- Differential Mode/Symmetrical(L-L)

FFSAS01BFR

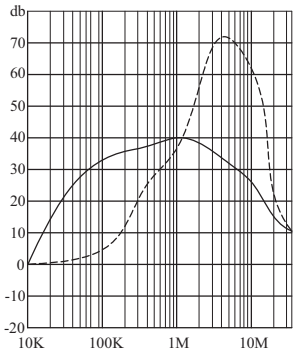

FFSAS02BFR

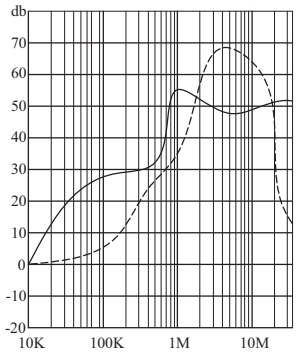

FFSAS04BFR

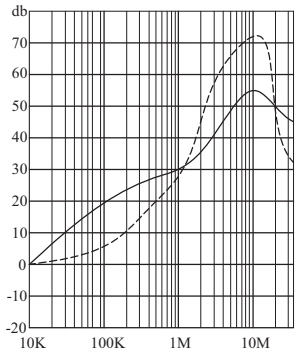

FFSAS06BFR

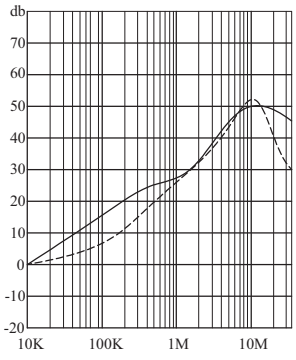

FFSAS10BFR

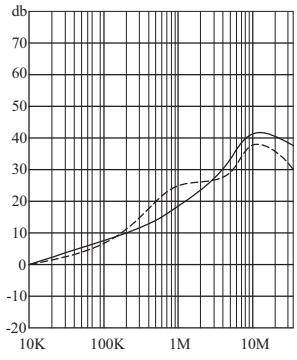

23 Feb 2021