CE EMC LVD | CB Scheme IEC 60950-1 | cULus UL 508 UL 60079-15

Features

- Capacitor bank for energy storage, no battery needed!
- Guaranteed Hold-up-time 200mS/25A to 4 s/1.2A max.
- Output 24 to 28 VDC, 600W max.
- Active ready and inhibit signals
- Maintenance free, long lifetime, performance also at low temperature
- 3-year product warranty

The TSP-BFM24 buffer module will hold the output voltage of a 24 VDC power supply after brown outs or voltage dips of ten 50 Hz cycles at full load. During this buffer period no deterioration of the 24 VDC output voltage will occur. For many applications this buffer module is an ideal and cost effective alternative to a battery based backup system. The buffer module consists of a large bank of capacitors. When the power supply is switched on, the buffer capacitors will be charged. This will take approximately 30 second and an opto-coupler signal indicates the "READY" condition. When a power fail occurs, the capacitor bank is discharged, maintaining the output of the buffer module at its nominal voltage. This condition is indicated by a "POWER FAIL" signal. The hold up time is typically 200 ms at 25 A and 4 seconds typically at 1,2 A. After 4 seconds the buffer device will switch off the output voltage. The operating modes of the module are also indicated by a LED on the front panel. The major advantage of this buffer solution is, that it is fully maintenance free and its storage capability does not deteriorate over the live time of the product.

Models

Order Code	Input	Buffer Time	Output Voltage adjust.	Output Current max.*	Output Power max.
TSP–BFM24	24 VDC	200ms typ. @ 25A max. 4.0 s max. @ 1.2A	24 VDC	25.0 A	600 W

* Maximum current at nominal Vout

Buffer Module	Possible TSP input source
TSP–BFM24	TSP 90-124 TSP 90-124N TSP 180-124 TSP 360-124 TSP 600-124

Output Specifications

Ouput Voltage adjustable range with potentiometer	22 – 28 VDC
Ripple and noise (20 MHz bandwidth)	200 mVp-p typ.
Parallel operation	2 devices possible

General Specifications

Operating temperature		–25°C to +70°C max. derating above +40°C : 1.5 %/K
Storage temperature		–25°C to +85°C max.
Temperature coefficient		0.02 %/K
Humidity (non condensing)		5 % to 90 % rel. H max.
Reliability, calculated MTBF at +25°C acc. to IEC 61709		>3.3 Mio h
Buffer voltage		adjustable, >1 V below input voltage, min. 22 VDC
Charging		0.6 A max. / 30s max.
Status signals		Buffer Active , Buffer Ready (optocoupler output) and dual colour LED for status indication
Inhibit		optocoupler input: 35V max. <5mA
Alarm outputs		28 VDC / 10 mA
Degree of protection		IP 20 (IEC/EN 60529)
Isolation		according to IEC/EN 60950-1, UL 60950-1, UL 508
Altitude during operation		tba.
Safety standard		IEC/EN 60950-1, UL 60950-, UL508
Safety approvals	– CB test certificate IEC 60950-1 (SIQ for EN)	
Electromagnetic compatibility		in correspondence to connected units (no internal switching device)
Environment	– Vibration acc. IEC 60068-2-6; – Shock acc. IEC 60068-2-27	3 axis, sine sweep, 10 – 55 Hz, 1 g, 1 oct/min 3 axis, 15 g half sine, 11 ms
Enclosure material		aluminium (chassis) / stainless steel (cover)
Mounting	– DIN-rail mounting – Wall mounting (option)	for DIN-rails as per EN 50022-35x15/7.5 (snap-on with self-locking spring) with wall mounting bracket - see page 4
Connection		detachable screw terminals (plugs included)
Installation instructions		

All specifications valid at nominal input voltage, full load and +25°C after warm-up time unless otherwise stated.

Function

Function Diagram:

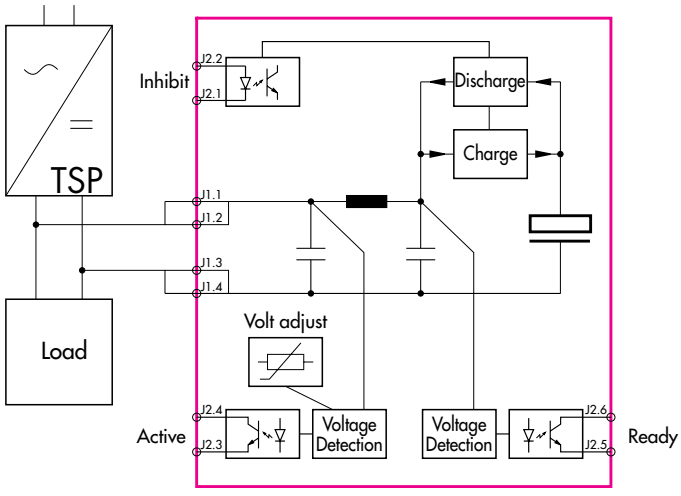

Outline Dimensions

TSP-BFM24

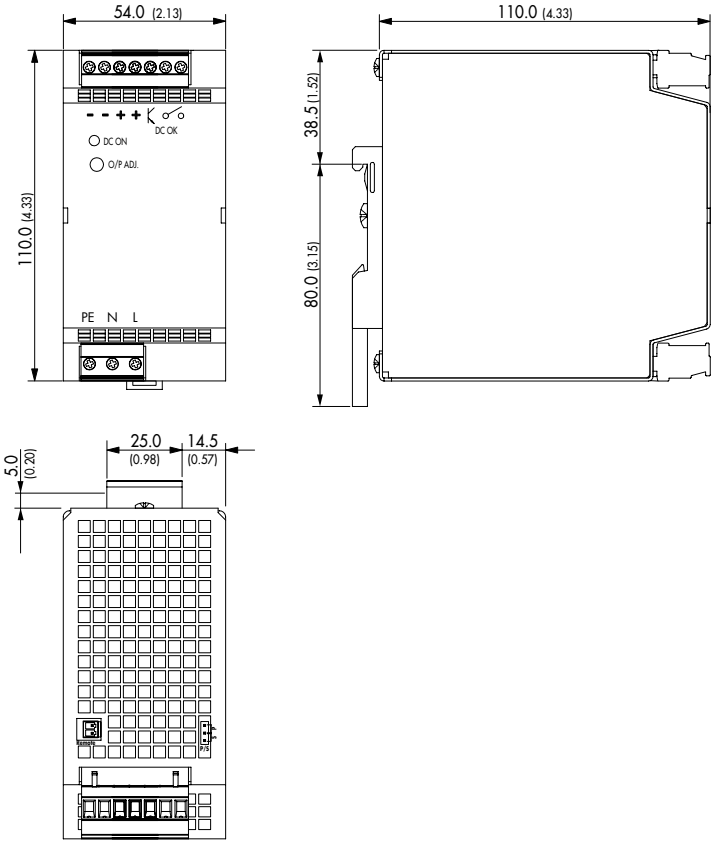

Connector Positions

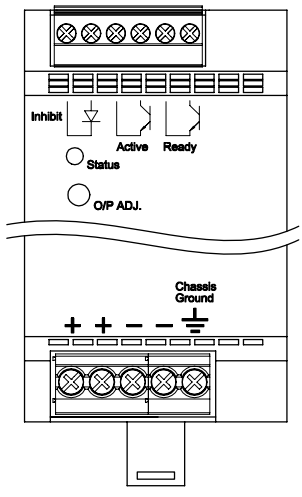

TSP–WMK Wall Mounting Bracket

Ordercode of Kit	For Models	Content of Kit
TSP-WMK03	TSP-BFM24	1 bracket

TSP-WMK03

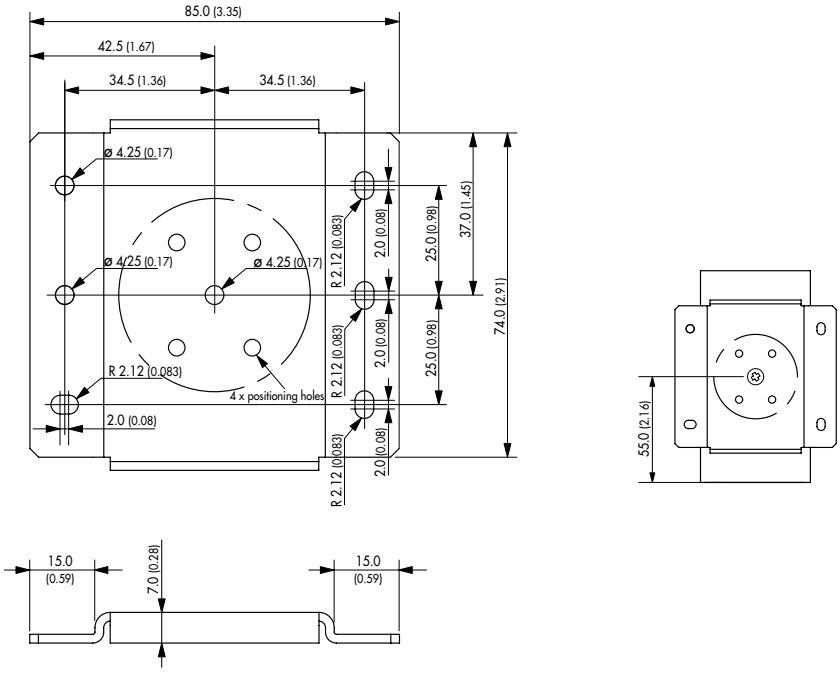

Material: 2 mm Mild Steel
Tolerance: ±0.1mm (± 0.004)